NexTek Lightning Arrestor Solutions for GPS Navigation and Timing/Synchronization Applications

GPS and other Global Navigation Systems are used worldwide to provide extremely accurate positioning and timing information. When these systems are installed permanently on a building, tower, or other structure, surge protection should always be installed on the cable run between Antenna and Receiver.

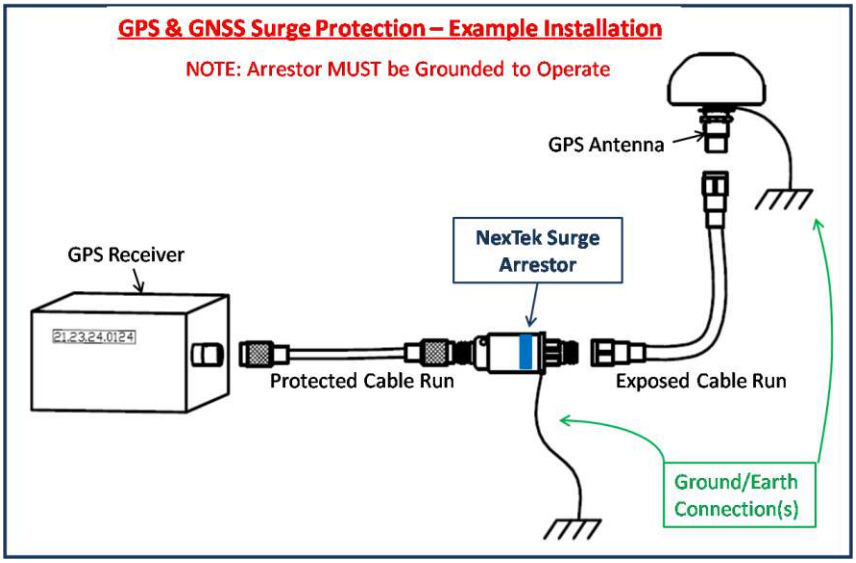

Most GPS Receivers tend to be extremely sensitive to Surge/Overvoltage Energy, and at the same time they are often uptime-critical components. The best way to ensure your equipment is safe and your system is running properly is to use a high quality coaxial surge arrestor, which will protect the receiver from harmful energy.

For Most Global Navigation & Timing Applications

For most GPS applications, where receivers tend to be more sensitive than normal radios, NexTek offers a multi-stage "fine protection" product which reduces residual Voltage and Energy to protect even the most sensitive GPS unit.

FPLNFNFBxxx

Maximum Surge Protection for GPS, Galileo, EGNOS, GLONASS

- **1.15GHz - 1.61GHz**
- N-female to N-female, bulkhead mount
- Extremely Low Residual Energy
- VSWR: 1.1 typical
- Insertion Loss: 0.1dB typical
- Multiple Strike Protection
- Environmental: IP68

Click Image for Link to Product Page (PDF Datasheet, 2D & 3D Drawings)->

For Global Navigation & Timing Applications where Size & Space are Critical

For GPS applications where size is at a premium, NexTek PTC G-Class units are extremely compact

PTCSxxSxx20G

Ultra Compact GDT Surge Arrestor

- **0(dc) - 12.5GHz**
- SMA-female to SMA-female or male, bi-directional [Reverse Polarity Available]
- Extremely Compact Design
- VSWR: 1.2 typical
- Insertion Loss: 0.1 typical
- Multiple Strike Protection
- Environmental: IP68

Click Image for Link to Product Page (PDF Datasheet, 2D & 3D Drawings)->

For Global Navigation & Timing Applications requiring Long Life and Best Serviceability

For GPS applications where serviceability and long life are critical, NexTek offers a replaceable GDT arrestor

PTRONxONFxxS

Replaceable GDT Surge Arrestor

- **0(dc) - 2.5GHz**
- N-female to N-female or male, bi-directional
- Extremely Robust, Field Serviceable
- VSWR: 1.2 typical
- Insertion Loss: 0.2 typical
- Multiple Strike Protection
- Environmental: IP68

Click Image for Link to Product Page (PDF Datasheet, 2D & 3D Drawings)->

For More Information About GPS Signal Lightning Protection, Visit http://nextek.com/markets-solutions/gpstiming

(978) 486-0582
http://nextek.com

NexTek

2 Park Drive, Building #1
Westford, MA 01886